NUCOR BUILDINGS GROUP

GCM11

8" CEE GIRT CLIP AT MASONRY WALL (2 1/4" GA)

MASTER PART MARK	VIN	AVAILABLE THICKNESS	YIELD MIN.	BLANK LENGTH	BLANK WIDTH	WEIGHT (LBS)
GCM11	D	NA	NA	NA	NA	2.70

SUB PART MARK	VIN	AVAILABLE THICKNESS	YIELD MIN.	BLANK LENGTH	BLANK WIDTH	WEIGHT (LBS)
PART-A	D	0.150	55KSI	10.000	5.000	2.13
PART-B	D	0.150	55KSI	2.250	6.000	0.57

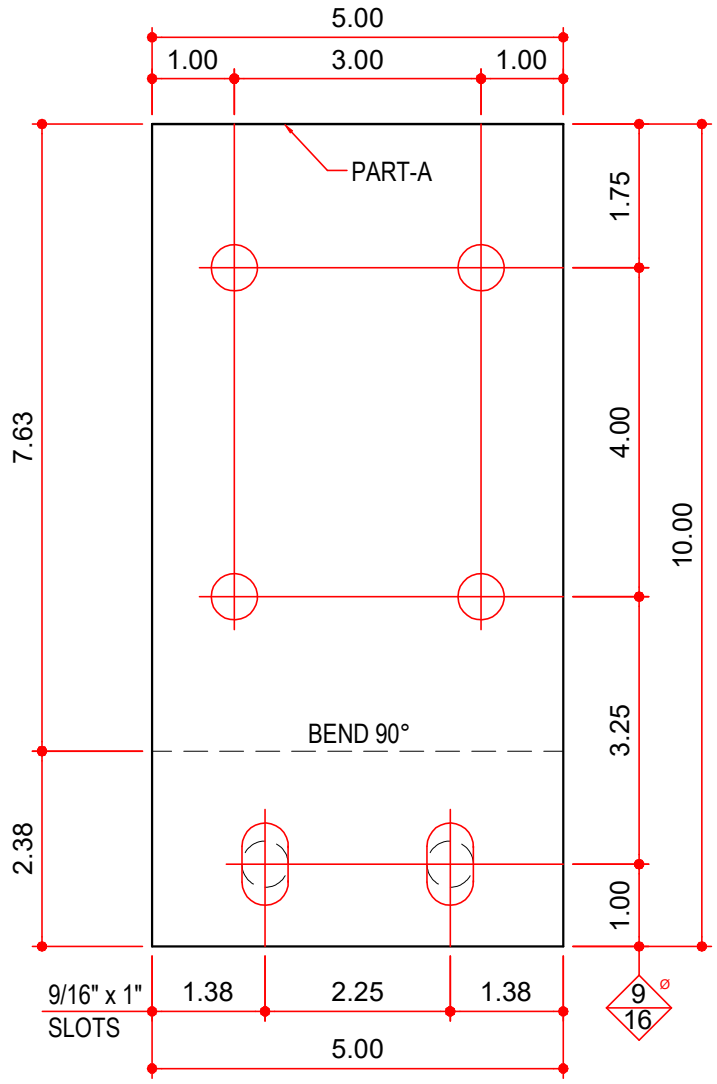

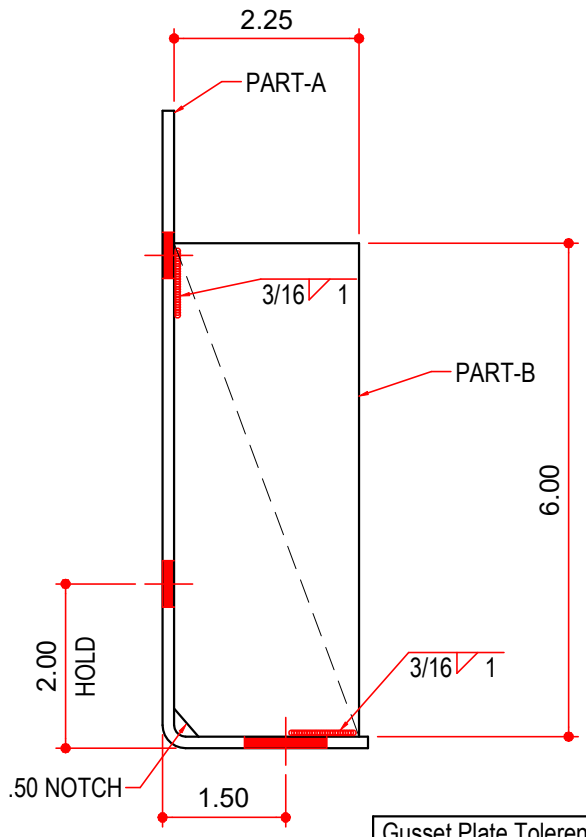

Gusset Plate Tolerences:
Width: (+0.0, -0.25)
Length: 6.00 (+0.50, -0.50)

NOTES:

1) DUE TO LIMITED PRODUCTION CAPABILITIES THE TERRELL PLANT WILL PRODUCE THIS CLIP WITH ALL 9/16"Ø HOLES.
2) FULL GUSSET STANDARD. ALTERNATE TO PROVIDE A HALF GUSSET IS ACCEPTABLE BY DESIGN
3) ALL WELDS PER WPS FG-5

AVAILABLE COLORS

GP, HD, RP, NP